STANLEY®

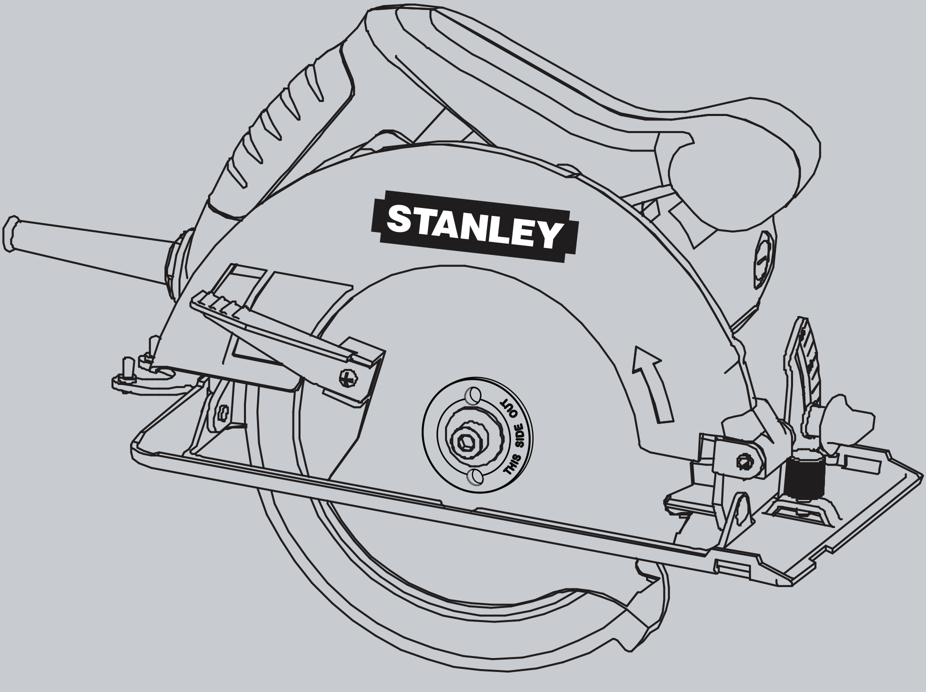

STEL311

English 3
繁體中文 9

FIG.A

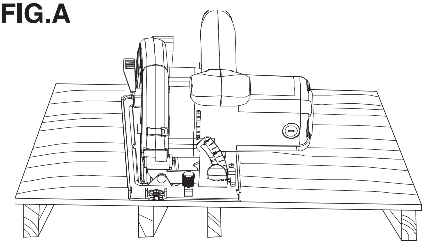

FIG.B

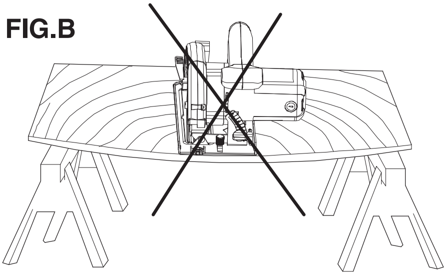

FIG.C

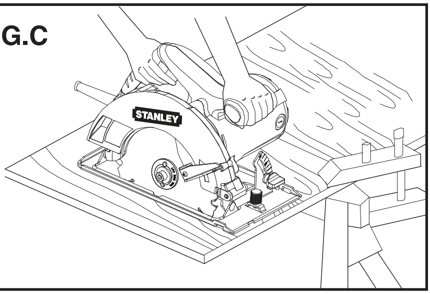

FIG.D

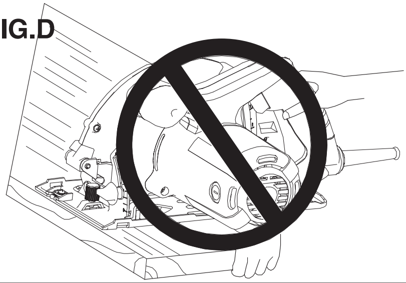

FIG.E

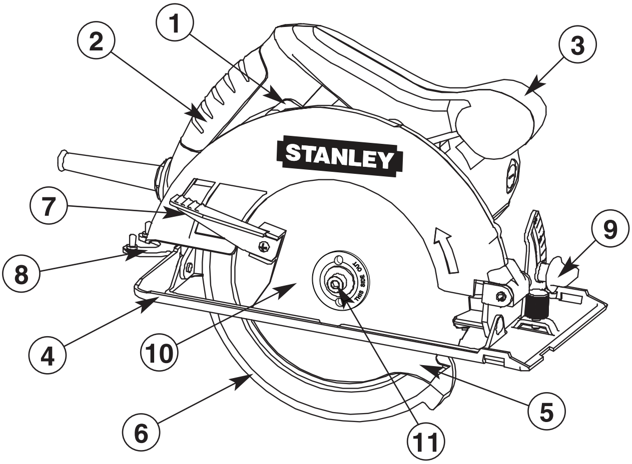

FIG.F

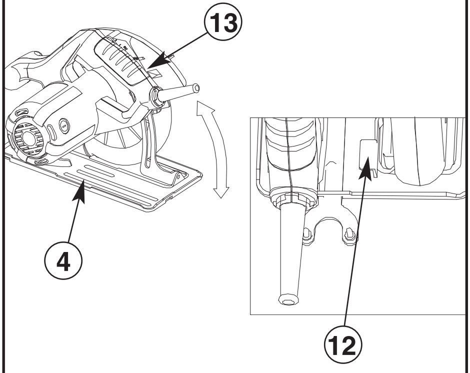

FIG.G

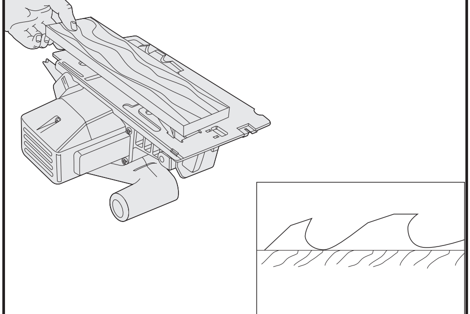

FIG.H

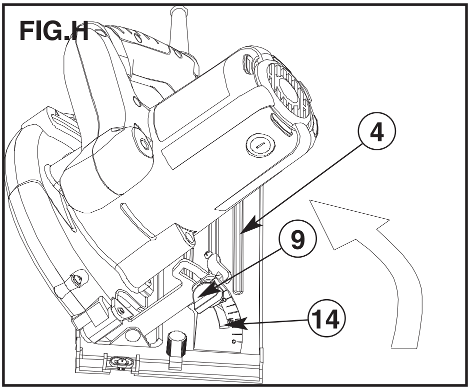

FIG.I

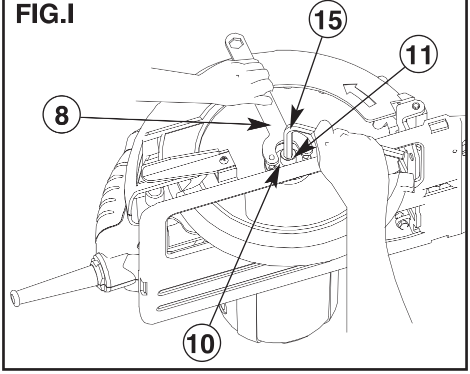

FIG.J

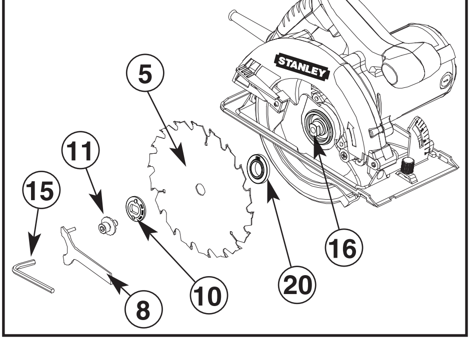

FIG.K

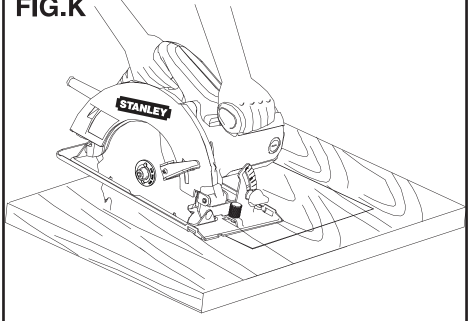

FIG.L

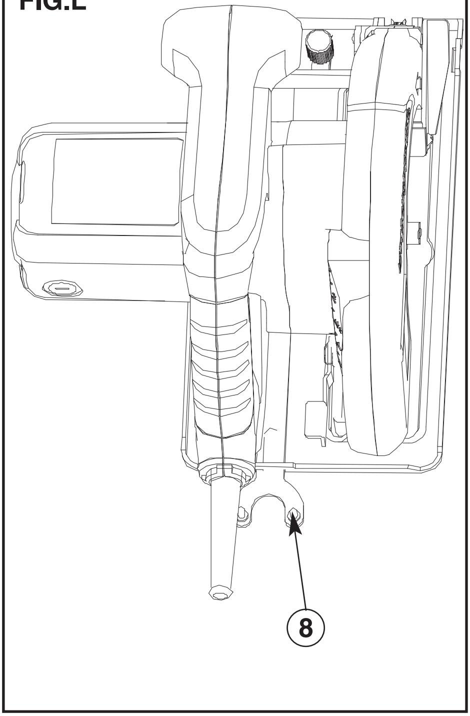

FIG.M

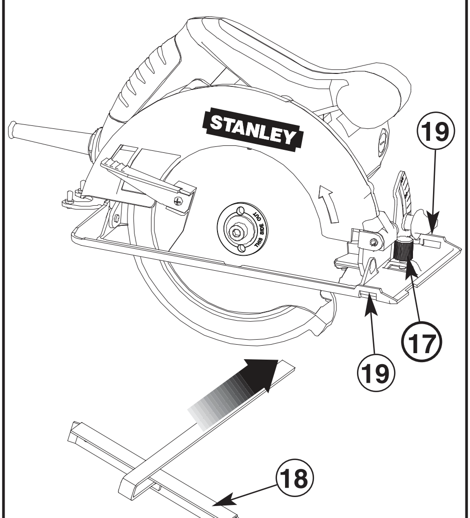

STEL311
1510W Circular Saw

TECHNICAL DATA

SPECIFICATION		STEL311
VOLTAGE	V	110
POWER	W	1510
NO-LOAD SPEED	/min	5500
MAX. BLADE DIAMETER	mm	185
MAX. CUTTING DEPTH	mm	62

INTENDED USE

Your Stanley saw has been designed for sawing wood and wood products.

GENERAL SAFETY RULES

Warning! Read and understand all instructions. Failure to follow all instructions listed below, may result in electric shock, fire and/or serious personal injury.

SAFE THESE INTRUCTIONS

⚠ SAFETY INSTRUCTIONS

General power tool safety warnings.

Warning! Read all safety warnings and all instructions. Failure to follow the warnings and instructions listed below may result in electric shock, fire and/or serious injury.

Save all warnings and instructions for future reference. The term "power tool" in all of the warnings listed below refers to your mains operated (corded) power tool or battery operated (cordless) power tool.

1. Work area

a. **Keep work area clean and well lit.** Cluttered and dark areas invite accidents.

b. **Do not operate power tools in explosive atmospheres, such as in the presence of flammable liquids, gases or dust.** Power tools create sparks which may ignite the dust or fumes.

c. **Keep children and bystanders away while operating a power tool.** Distractions can cause you to lose control.

2. Electrical safety

a. **Power tool plugs must match the outlet. Never modify the plug in any way. Do not use any adapter plugs with earthed (grounded) power tools.** Unmodified plugs and matching outlets will reduce risk of electric shock.

b. **Avoid body contact with earthed or grounded surfaces such as pipes, radiators, ranges and refrigerators.** There is an increased risk of electric shock if your body is earthed or grounded.

c. **Do not expose power tools to rain or wet conditions.** Water entering a power tool will increase the risk of electric shock.

d. **Do not abuse the cord. Never use the cord for carrying, pulling or unplugging the power tool. Keep cord away from heat, oil, sharp edges or moving parts.** Damaged or entangled cords increase the risk of electric shock.

e. **When operating a power tool outdoors, use an extension cord suitable for outdoor use.** Use of a cord suitable for outdoor use reduces the risk of electric shock.

f. **If operating a power tool in a damp location is unavoidable, use a residual current device (RCD) protected supply.** Use of an RCD reduces the risk of electric shock.

3. Personal safety

a. **Stay alert, watch what you are doing and use common sense when operating a power tool. Do not use a power tool while you are tired or under the influence of drugs, alcohol or medication.** A moment of inattention while operating power tools may result in serious personal injury.

b. **Use safety equipment. Always wear eye protection.** Safety equipment such as dust mask, non-skid safety shoes, hard hat, or hearing protection used for appropriate conditions will reduce personal injuries.

c. **Prevent unintentional starting. Ensure the switch is in the off-position before connecting to power source and/or battery pack, picking up or carrying the tool.** Carrying power tools with your finger on the switch or energising power tools that have the switch on invites accidents.

d. **Remove any adjusting key or wrench before turning the power tool on.** A wrench or a key left attached to a rotating part of the power tool may result in personal injury.

e. **Do not overreach. Keep proper footing and balance at all times.** This enables better control of the power toolin unexpected situations.

f. **Dress properly. Do not wear loose clothing or jewellery. Keep your hair, clothing and gloves away from moving parts.** Loose clothes, jewellery or long hair can be caught in moving parts.

g. **If devices are provided for the connection of dust extraction and collection facilities, ensure these are connected and properly used.** Use of these devices can reduce dust related hazards.

4. Power tool use and care

a. **Do not force the power tool. Use the correct power tool for your application.** The correct power tool will do the job better and safer at the rate for which it was designed.

b. **Do not use the power tool if the switch does not turn it on and off.** Any power tool that cannot be controlled with the switch is dangerous and must be repaired.

c. Disconnect the plug from the power source and/or the battery pack from the power tool before making any adjustments, changing accessories, or storing power tools. Such preventive safety measures reduce the risk of starting the power tool accidentally

d. Store idle power tools out of the reach of children and do not allow persons unfamiliar with the power tool or these instructions to operate the power tool. Power tools are dangerous in the hands of untrained users.

e. Maintain power tools. Check for misalignment or binding of moving parts, breakage of parts and any other condition that may affect the power tools operation. If damaged, have the power tool repaired before use. Many accidents are caused by poorly maintained power tools.

f. Keep cutting tools sharp and clean. Properly maintained cutting tools with sharp cutting edges are less likely to bind and are easier to control.

g. Use the power tool, accessories and tool bits etc. in accordance with these instructions, taking into account the working conditions and the work to be performed. Use of the power tool for operations different from those intended could result in a hazardous situation.

5. Service

a. Have your power tool serviced by a qualified repair person using only identical replacement parts. This will ensure that the safety of the power tool is maintained.

6. Electrical safety

This appliance is double insulated therefore no earth wire is required.Always check that the power supply corresponds to the voltage on the rating plate.

Warning! If the power cord is damaged, it must be replaced by the manufacturer, authorized **Stanley** Service Center or an equally qualified person in order to avoid damage or injury. If the power cord is replaced by an equally qualified person, but not authorized by **Stanley**, the warranty will not be valid.

7. Labels on tool

The label on your tool may include the following symbols:

V ....Volts
A....................Amperes
Hz ....Hertz
W ....Watts
min ....minutes
∿ ....Alternating Current
⎓ ....Direct Current
n_0 ....No-Load Speed
.................Class II Construction
.................Earthing Terminal
...............Safe Alert Symbol
.../min ....Revolutions or Reciprocation per
.............Read instructions manual

- For tools intended to cut wood, instruction on correct use of the dust collection system.
- For tools intended to cut wood, instruction to wear a dust mask.
- Instrcution to only use saw blades recommended.
- Instruction to always wear hearing protection.

SAFETY INTRUCTIONS FOR ALL SAWS
CUTTING PROCEDURES

a. **DANGER: Keep hands away from cutting area and the blade. Keep your second hand on auxiliary handle, or motor housing.** If both hands are holding the saw, they cannot be cut by the blade.

b. **Do not reach underneath the workpiece.** The guard cannot protect you from the blade below the workpiece.

c. **Adjust the cutting depth to the thickness of the workpiece.** Less than a full tooth of the blade teeth should be visible below the workpiece.

d. **Never hold piece being cut in your hands or across your leg.** Secure the workpiece to a stable platform. It is important to support the work properly to minimize body exposure, blade binding, or loss of control.

e. **Hold power tool by insulated gripping surfaces when performing an operation where the cutting tool may contact hidden wiring or its own cord.** Contact with a "live" wire will also make exposed metal parts of the power tool "live" and shock the operator.

f. **When ripping always use a rip fence or straight edge guide.** This improves the accuracy of cut and reduces the chance of blade binding.

g. **Always use blades with correct size and shape (diamond versus round) of arbour holes.** Blades that do not match the mounting hardware of the saw will run eccentrically, causing loss of control.

h. **Never use damaged or incorrect blade washers or bolt.** The blade washers and bolt were specially designed for your saw, for optimum performance and safety of operation.

FURTHER SAFETY INSTRUCTIONS FOR ALL SAWS

Causes and operator prevention of kickback:

- Kickback is a sudden reaction to a pinched, bound or misaligned saw blade, causing an uncontrolled saw to lift up and out of the workpiece toward the operator;
- When the blade is pinched or bound tightly by the kerf closing down, the blade stalls and the motor reaction drives the unit rapidly back toward the operator;

- If the blade becomes twisted or misaligned in the cut, the teeth at the back edge of the blade can dig into the top surface of the wood causing the blade to climb out of the kerf and jump back toward the operator.
- Kickback is the result of saw misuse and/or incorrect operating procedures or conditions and can be avoided by taking proper precautions as given below.

a. **Maintain a firm grip with both hands on the saw and position your arms to resist kickback forces.** Position your body to either side of the blade, but not in line with the blade. Kickback could cause the saw to jump backwards, but kickback forces can be controlled by the operator, if proper precautions are taken.
NOTE For circular saws with 185 mm or smaller diameter blades, the words "with both hands" may be omitted.

b. **When blade is binding, or when interrupting a cut for any reason, release the trigger and hold the saw motionless in the material until the blade comes to a complete stop.** Never attempt to remove the saw from the work or pull the saw backward while the blade is in motion or kickback may occur. Investigate and take corrective actions to eliminate the cause of blade binding.

c. **When restarting a saw in the workpiece, centre the saw blade in the kerf and check that saw teeth are not engaged into the material.** If saw blade is binding, it may walk up or kickback from the workpiece as the saw is restarted.

d. **Support large panels to minimise the risk of blade pinching and KICKBACK.** Large panels tend to sag under their own weight. Supports must be placed under the panel on both sides, near the line of cut and near the edge of the panel.

e. **Do not use dull or damaged blades.** Unsharpened **or** improperly set blades produce narrow kerf causing excessive friction, blade binding and kickback.

f. **Blade depth and bevel adjusting locking levers must be tight and secure before making cut.** If blade adjustment shifts while cutting, it may cause binding and kickback.

g. **Use extra caution when making a "plunge cut" into existing walls or other blind areas.** The protruding blade may cut objects that can cause kickback.

SAFETY INSTRUCTIONS FOR CIRCULAR SAW LOWER GUARD FUNCTION

a. **Check lower guard for proper closing before each use. Do not operate the saw if lower guard does not move freely and close instantly. Never clamp or tie the lower guard into the open position.** If saw is accidentally dropped, lower guard may be bent. Raise the lower guard with the retracting handle and make sure it moves freely and does not touch the blade or any other part, in all angles and depths of cut.

b. **Check the operation of the lower guard spring. If the guard and the spring are not operating properly, they must be serviced before use.** Lower guard may operate sluggishly due to damaged parts, gummy deposits, or a build-up of debris.

c. **Lower guard may be retracted manually only for special cuts such as "plunge cuts" and "compound cuts." Raise lower guard by retracting handle and as soon as blade enters the material, the lower guard must be released.** For all other sawing, the lower guard should operate automatically.

d. **Always observe that the lower guard is covering the blade before placing saw down on bench or floor.** An unprotected, coasting blade will cause the saw to walk backwards, cutting whatever is in its path. Be aware of the time it takes for the blade to stop after switch is released.

SAFETY INSTRUCTIONS FOR CIRCULAR SAW

a. **Check guard for proper closing before each use. Do not operate the saw if guarddoes not move freely and enclose the blade instantly.** Never clamp or tie the guard with the blade exposed. If saw is accidentally dropped, guard may be bent. Check to make sure that guard moves freely and does not touch the blade or any other part, in all angles and depths of cut.

b. **Check the operation and condition of the guard return spring. If the guard and the spring are not operating properly, they must be serviced before use.** Guard may operate sluggishly due to damaged parts, gummy deposits, or a build-up of debris.

c. **Assure that the guide plate of the saw will not shift while performing the “plunge cut” when the blade bevel setting is not at 90°.** Blade shifting sideways will cause binding and likely kick back.

d. **Always observe that the guard is covering the blade before placing saw down on bench or floor.** An unprotected, coasting blade will cause the saw to walk backwards, cutting whatever is in its path. Be aware of the time it takes for the blade to stop after switch is released.

SAFETY GUIDELINES/DEFINITIONS

It is important for you to read and understand this manual. The information it contains relates to protecting **Your Safety and Preventing Problems.** The symbols below are used to help you recognize this information.

⚠ **Danger!** Indicates an imminently hazardous situation which, if not avoided, will result in death or serious injury.

⚠ **Warning!** Indicates a potentially hazardous situation which, if not avoided, could result in death or serious injury.

⚠ **Caution!** Indicates a potentially hazardous

situation which, if not avoided, may result in minor or moderate injury.

⚠ **Caution!** Used without the safety alert symbol indicates potentially hazardous situation which, if not avoided, may result in property damage.

ADDITIONAL SAFETY RULES FOR CIRCULAR SAW

⚠ **Warning!** Use of this tool can generate and/or disburse dust, which may cause serious and permanent respiratory or other injury. Always use NIOSH/OSHA approved respiratory protection appropriate for the dust exposure. Direct particles away from face and body.

⚠ **Caution!** Wear appropriate hearing protection during use. Under some conditions and duration of use, noise from this product may contribute to hearing loss.

- **Snagging the lower guard on a surface below the material being cut can momentarily reduce operatol control.** The saw can lift partially out of the cut increasing the chance of blade twist. Ensure there is sufficient clearance under the workpiece.
- **When necessary to raise lower guard manually, use the retracting lever.**
- **Keep the Blades Clean and Sharp.** Sharp blades minimize stalling and kickback. The use of dull and/or dirty blades can increase the saw loading causing the operator to push harder which promotes twisting.

⚠ **Caution! Laceration Hazard. Keep hands away from cutting areas.** Keep hands away from blades. Never place hands in front of or behind the path of the blade while cutting. Do not reach underneath work while blade is rotating. Do not attempt to remove cut material when blade is moving.

- **Support large panels.** Large panels must be supported as shown (Fig. A) in this manual to minimize the risk of blade pinching and kickback. Material supported only at the ends (Fig. B) will lead to blade pinching. When cutting operation requires the resting of the saw on the workpiece, the saw shall be rested on the larger portion and the smaller piece cut off.
- **Use only correct blades and blade assembly components when mounting blades.** Do not use blades with incorrect size holes. Never use defective or incorrect blade washers or bolts. Follow blade assembly procedures.
- **Adjustments. Before cutting be sure depth and bevel adjustments are tight.**
- **Support and secure the work properly.** Insure that the material to be cut is clamped (Fig. C) and solidly supported and balanced on a strong, stable and level work surface. Support the work so that the wide portion of the saw shoe is on the portion of the material that doesn't fall after the cut is made. Never hold cut off piece by hand (Fig. D). KICKBACK from blade pinch can result. Keep both hands on saw at all times.
- **Stay alert and exercise control. Keep body positioned to one side of blade**. Always maintain a firm grip and control of saw with both hands. Do not change hand grip or body position while saw is running. Take precaution to avoid injury from cut off pieces and other falling material during operation.

⚠ **Danger!** Release switch immediately if blade binds or saw stalls.

FEATURES (Fig. E)

1. On/Off Switch
2. Main Handle
3. Secondary Handle
4. Shoe
5. Saw Blade
6. Saw Blade Guard
7. Blade Guard Retracting Lever
8. Saw Blade Spanner Wrench
9. Bevel Adjustment Knob
10. Outer Washer
11. Blade Retaining Screw

Saw Blade Hex Wrench (Shown on Fig.I (15))
Rip Fence (Shown on Fig. M (18))
Inner Flange (Shown on Fig. J (20))

ASSEMBLY/ADJUSTMENT SET-UP

⚠ **Warning!** Always unplug saw from power supply before any of the following operations.

Adjusting the Depth of Cut (Fig. F and G)

The depth of cut should be set according to the thickness of the workpiece.

- Loosen the lever (12) to unlock the saw shoe.
- Move the saw shoe (4) into the desired position. The corresponding depth of cut can be read from the scale (13).
- Tighten the lever to lock the saw shoe in place.
- Set depth adjustment of saw such that one tooth of the blade projects below the workpiece as shown in Fig. G.

Adjusting the Bevel Angle (Fig. H)

This tool can be set to bevel angles between 0° and 45°

- Loosen the locking knob (9) to unlock the saw shoe.
- Move the saw shoe (4) into the desired position. The corresponding bevel angle can be read from the scale (14).
- Tighten the locking knob to lock the saw shoe in place.

Attaching the Blade (Fig. I and J)

- To prevent spindle rotation engage the protrusions of the spanner wrench (8) into the holes in the outer washer (10) as shown in Fig. I.
- Loosen and remove the blade retaining screw (11) by turning the hex wrench (15) counter- clockwise.
- Remove the outer washer.

- Check and re-assembly inner flange (20) on spindle (16). Insure the correct side of inner flange (20) faces outward and match saw blade.
- Place the saw blade (5) onto the inner flange (20), making sure that the arrow on the blade points in the same direction as the arrow on the tool.
- Fit the outer washer (10) on the spindle.
- Insert the blade retaining screw (11) into the hole in the spindle.
- Prevent spindle rotation by engaging the spanne wrench into the holes of the outer washer.
- Securely tighten the blade retaining screw by holding the spanner wrench and turning hex wrench clockwise to tighten the blade retaining screw.

  ⚠ **Warning!** Inner flange (20) respectively marked with “19” and “20”, match the saw blade (5) with 19mm or 20mm diameter arbor.

Removing the Blade

- To prevent spindle rotation, engage the protrusions of the spanner wrench (8) into the holes in the outer washer (10).
- Loosen and remove the blade retaining screw (11) by turning it counterclockwise using the hex wrench (15).
- Remove the outer washer (10).
- Remove the saw blade (5).

  ⚠ **Warning!** To reduce the risk of serious personal injury, read, understand and follow all important safety warnings and instructions prior to using tool.

GENERAL CUTS

Guard Against Kickback

With unit unplugged, follow all assembly, adjustment and set up instructions. Make sure lower guard operates. Select the proper blade for the material to be cut.

- Measure and mark work for cutting.
- Support and secure work properly (See Safety Rules and Instructions).
- Use appropriate and required safety equipment (See Safety Rules).
- Secure and maintain work area (See Safety Rules).
- With plug inserted and guard closed, make sure switch turns saw on and off.

  ⚠ **Warning!** It is important to support the work properly and to hold the saw firmly to prevent loss of control which could cause personal injury. Fig. C illustrates recommended hand position.

OPERATION

Switch

- To operate the tool, depress the trigger switch (1). The tool will continue to run as long as the trigger is depressed.
- To turn the tool off, release the trigger switch (1). There is no provision for locking the tool on, and the switch should never be locked on by any other means.

Sawing

⚠ **Warning!** To reduce the risk of serious personal injury,always hold the tool with both hands.

- Let the blade run freely for a few seconds before starting the cut.
- Apply only a gentle pressure to the tool while performing the cut.
- Work with the shoe pressed against the workpiece.

HINTS FOR OPTIMUM USE

- As some splintering along the line of cut on the top side of the workpiece cannot be avoided, cut on the side where splintering is acceptable.
- Where splintering is to be minimized, e.g. when cutting laminates, clamp a piece of plywood onto the top of the workpiece.

Pocket Cutting (Fig. K)

Pocket cutting is used to cut a hole in a piece of material without cutting from the side.

- Measure and mark work.
- Tilt saw forward and rest front of the shoe on material to be cut. Align so that cut will begin at the back of the drawn rectangle shown in Fig. K.
- Using the retracting lever, retract blade guard to an upward position, with the blade just clearing the material, start motor and gradually lower the saw into the material.

  ⚠ **Warning!** As blade starts cutting the material, release the retracting lever immediately.
- Never tie the blade guard in a raised position.
- When the shoe rests flat on the material being cut, complete the cut in forward direction.
- Allow the blade to come to a complete stop before lifting saw from material.
- When starting each new cut, repeat the above steps.

Wrench Storage (Fig. L)

The spanner wrench (8) can be stored on the saw shoe as shown in Fig. L.

Attaching and Removing the Rip Fence (Fig. M)

The rip fence is used to saw in a straight line parallel to the edge of the working piece.

Attaching

- Loosen the locking knob (17).
- Insert the rip fence (18) through the openings (19).
- Slide the rip fence into the desired position.
- Tighten the locking knob.

Removing

- Loosen the locking knob.
- Pull the rip fence out of the tool. Note: If you do not have a proper fitting fence, use a straight edge guide in contact with the edge of the shoe to improve accuracy of cut and reduce the possibility of binding

and kickback.

Accessories
The performance of your tool depends on the accessory used. Stanley and Piranha accessories are engineered to high quality standards and designed to enhance the performance of your tool. By using these accessories you will get the very best from your tool.

⚠ **Warning!** The use of any accessory not recommended for use with this tool could be hazardous. Use only 185mm blades with 19mm or 20mm diameter arbor. **Exception:** 175mm abrasive blades can be used. When cutting metal, be careful of hot sparks which are thrown by the blade.

MAINTENANCE

Your tool has been designed to operate over a long period of time with a minimum of maintenance. Continuous satisfactory operation depends upon proper tool care and regular cleaning.

⚠ **Warning!** Before performing any maintenance, switch off and unplug the tool.

- Regularly clean the ventilation slots in your tool using a soft brush or dry cloth.
- Regularly clean the motor housing using a damp cloth. Do not use any abrasive or solvent-based cleaner.

⚠ **Important!** To assure product Safety and Reliability, repairs, maintenance and adjustment (other than those listed in this manual) should be performed by authorized service centers or other qualified service personnel, always using identical replacement parts.

LUBRICATION

Stanley tools are properly lubricated at the factory and are ready for use.

PROTECTING THE ENVIRONMENT

Separate collection. This product must not be disposed of with normal household waste.

Should you find one day that your Stanley product needs replacement, or if it is of no further use to you, do not dispose of it with household waste. Make this product available for separate collection.

Separate collection of used products and packaging allows materials to be recycled and used again. Re-use of recycled materials helps prevent environmental pollution and reduces the demand for raw materials.

Local regulations may provide for separate collection of electrical products from the household, at municipal waste sites or by the retailer when you purchase a new product.

STEL311
1510W 圓鋸機

技術數據

規格		STEL311
電壓	伏特	110
功率	瓦特	1510
空載速度	/分	5500
鋸片最大直徑	毫米	185
最大切割深度	毫米	62

用途

本電圓鋸用來切割木材和木料產品。

一般電動工具安全規則

警告！閱讀并理解所有指示說明。如不遵守以下任何指示說明，可能導致觸電、火災和 / 或嚴重人身傷害。

請保存好所有指示說明

安全說明

電動工具一般安全警告。

警告！請閱讀所有安全警告和指示說明。如不遵守以下任何警告和指示說明，可能導致觸電、火災和 / 或嚴重傷害。

請保存好所有警告和指示說明，以備將來查閱。以下所有警告中的“電動工具”一詞是指電源驅動（有綫）電動工具，或者電池驅動（無綫）電動工具。

1. **工作區域**
a. **保持工作場地清潔和明亮。**混亂和黑暗的場地會引發事故。
b. **不要在易爆環境，如有易燃液體、氣體或粉塵環境中操作電動工具。**電動工具産生的火花會點燃粉塵或氣體。
c. **請讓兒童和旁觀者離開後操縱電動工具時。**分心會使你放鬆控制。

2. **電氣安全**
a. **電動工具的插頭必須與插座相配。切勿以任何方式改裝插頭。需接地的電動工具不能使用任何轉換插頭。**未經改裝的插頭和相配的插座將減少觸電危險。
b. **避免人體接觸接地表面，如管道、散熱片、爐竈和冰箱等。**如果您的身體接地會增加觸電危險。
c. **不得將電動工具暴露在雨中或潮濕環境中。**水進入電動工具將增加觸電危險。
d. **不得濫用電源綫。絶不能用電綫搬運、拉動電動工具或拔出其插頭。讓電綫遠離熱、油、鋭邊或運動部件。**受損或纏繞的電綫會增加觸電危險。
e. **在户外使用電動工具時，使用適合户外使用的外接電綫。**適合户外使用的電綫將減少觸電危險。
f. **如果必須在潮濕場合使用電動工具，請使用漏電保護器（RCD）。**使用RCD可減小電擊危險。

3. **人身安全**
a. **保持警覺。操作電動工具時，關注所從事的操作并保持清醒。切勿在疲倦、藥物、酒精或治療反應的情況下操作電動工具。**操作電動工具期間精力分散會導致嚴重人身傷害。
b. **使用安全防護裝備。始終佩戴護目鏡。**安全裝置，諸如用于適當條件下的防塵面具、防滑安全鞋、安全帽或聽力保護等裝置能減少人身傷害。
c. **避免意外啓動。確保開關在插入差頭時處于關斷位置。**手指放在開關上搬運電動工具，或開關處于接通狀態時插入插頭均可引發危險。
d. **在電動工具接通之前，取下所有調整鑰匙或扳手。**遺留在電動工具旋轉零件上的扳手或鑰匙可能會導致人身傷害。
e. **手不要伸得太長。時刻保持身體平衡，并找到合適的落脚點。**這樣在意外情況下才能更好地控制電動工具。
f. **着裝適當。不要穿寬鬆衣服或佩戴飾品。讓您的頭發、衣服和手套遠離運動部件。**寬鬆衣服、佩飾或長發可能會卷入運動部件。
g. **如果提供了與排屑裝置、除塵設備連接用的裝置，請確保他們連接完好且使用得當。**使用這些裝置可減少粉塵引起的危險。

4. **電動工具使用和注意事項**
a. **不要濫用電動工具。根據用途使用適當的電動工具。**按額定速率使用的適當電動工具會讓您更有效、更安全地執行工作。
b. **工具開關不能接通或關斷電源時，請勿使用工具。**不能用開關來控制的電動工具是危險的且必須進行修理。
c. **在進行任何調節、更換附件或存放工具之前，必須從電源上拔掉插頭和 / 或取下電池組。**這種防護性措施將降低電動工具意外啓動的風險。
d. **將閑置的電動工具存放在兒童所及範圍之外，并且不要讓不熟悉電動工具或對這些使用須知不了解的人操作電動工具。**電動工具在未經培訓的用户手中會發生危險。
e. **保養電動工具。檢查運動部件是否錯位或夾鋸或破損，以及是否存在影響電動工具運行的其它情況。**如有損壞，必須在使用前修理電動工具。許多事故原因都是電動工具電瓶不良。
f. **保持刀具鋒利和清潔。**保養良好、切削鋒利的刀具不易卡住而且更易于控制。
g. **按照使用説明書以及作業條件和具體進行的工作使用電動工具、附件和工具刀頭等。**電動工具用于設計之外的目的時，可能發生危險。

5. 維修

a. **將你得電動工具送交專業維修人員，必須使用同樣得備件進行更換**。這樣將確保所維修的電動工具的安全性。

6. 電氣安全

本設備爲雙重絶緣，因此無須接地綫。請務必確認電源電壓是否與標牌上標明的電壓一致。

警告！如電源綫損壞，必須用一條通過服務部門購得的專門制備軟綫來更換。
如電源綫由具備同等資格但未經史丹利授權的人士更換，則產品品質保將無效。

7. 工具上的標簽

您的工具上可能包含下列符號：

V ....伏特
A.................... 安培
Hz .... 赫兹
W .... 瓦特
min .... 分鐘
∿............... 交流電
⎓ .... 直流電
n_0 .... 空載速度
回............... 雙重絶緣
⏚............... 接地終端
⚠............... 安全警告標識
.../ /分 .... 每分鐘旋轉或往復次數
參閱説明手册

圓鋸機安全説明

- **讓手始終遠離切割區域和鋸片。輔助手始終持握輔手柄或馬達外殼**。如需雙手持握電圓鋸，請小心不要被鋸片割傷。
- **把身體保持在鋸片的任何一側，但不得與鋸片處于同一直綫**。回彈可能令電圓鋸往後跳動。（見“回彈的成因和預防”）
- **不得使肢體處于工作面下方**。防護裝置無法在工作面下方保護您不受鋸片傷害。
- **每次使用前檢查下方防護罩是否能順利閉合。如果下方防護罩活動不暢或不能及時閉合，請勿操作電圓鋸。决不能以夾、捆或其他方式將下方防護罩固定在打開位置**。如電圓鋸意外跌落，下方防護罩可能會彎曲。用回拉杆抬起下方防護罩，確保防護罩能順暢活動，且在任何角度和深度切割時都不觸碰鋸片或任何部件。
- **檢查下方防護罩彈簧的狀况和運作。如防護罩和彈簧無法正常運作，必須在使用前進行維護**。因部件損壞、粘性污垢或殘渣堆積等原因，下方防護罩可能會活動不暢。
- **衹有在進行“袋形切割”、“復合切割”等特殊切割時方可手動收起下方防護罩。使用回拉杆抬起下方防護罩。當鋸片切入切割對象時必須立即讓下方防護罩恢復原位**。進行所有其他切割作業時，必須讓下方防護罩處于自動運作模式。
- **將圓鋸機放置在凳子或地板上之前，始終要確認下方防護罩已蓋住鋸片**。無防護的鋸片轉動時可令電圓鋸往後運動，割壞路徑的一切物體。請注意，放開扳機後需一段時間鋸片才能完全停止轉動。
- **切勿手持或以兩腿夾住要切割的對象**。對切割對象進行適當的支撑非常重要，以最小化身體暴露、鋸片運轉不暢或失控的危險。
- **切割工具可能接觸隱藏的電綫或工具本身的電源綫時，請借助絶緣手柄握持工具**。如果接觸到“帶電”導綫，電動工具金屬部件表面就會“帶電”并使操作人員觸電。
- **高速切割時，始終使用導尺或直邊卡尺**。這有助于改善切割精度并降低鋸片運轉不暢的可能。
- **始終在軸孔尺寸和形狀（菱形和圓形）正確的前提下使用電圓鋸**。與鋸臺設備不匹配的鋸片將出現偏心運動，導致失控。
- **决不能使用損壞或不當的鋸片墊圈或螺栓**。鋸片墊圈和螺栓是爲您的電圓鋸特別設計的，可優化作業效率和安全。

所有圓鋸的安全説明
危險：

a. **讓手始終遠離鋸割區域和鋸片。你的另一衹手始終握住輔助手柄或電動機機殼**。如果雙手都握住圓鋸，就不會被鋸片傷害。
b. **不得接觸工件的下面**。護罩不能防止工件下方鋸片的危險。
c. **將鋸割深度調至工件的厚度**。能看到在工件下露出的鋸齒應不到一個齒高。
d. **不得手持工件或將工件架在腿上進行鋸割，應將工件夾緊在一個穩定的平臺上**。適當支撑工件對减少人身傷害、鋸片卡住或操作失控是至關重要的。
e. **在鋸割工具進行操作時有可能碰到暗綫或自身電綫的場合，須通過絶緣握持面來握住電動工具**。碰到“帶電”電綫也會使工具的裸露金屬部分帶電，從而使操作者觸電。
f. **當作劈鋸時，始終使用劈鋸護欄和直邊導向器**。這樣改善了鋸割精度并减小了鋸片卡住的幾率。
g. **始終使用尺寸和軸心形狀（菱形或圓形）得當的鋸片**。如果鋸片與圓鋸夾裝部件不符將引起偏心運轉而導致失控。
h. **不得使用損壞的和尺寸不符的墊圈和螺栓**。爲改善作業和安全運行，鋸片墊圈及螺栓是爲圓鋸專門設計的。

對各種圓鋸的進一步安全説明
回彈的原因和操作者防護：

回彈是當鋸片受擠壓、被卡住或偏離中心時的突然反作用，使圓鋸不受控制地抬起并脫離工衝向操作者。

——當鋸片受擠壓或被收攏的切口緊緊卡住時，鋸片堵轉且電動機反作用力驅使整機朝操作者快速彈回。

——如果鋸片發生扭曲或偏離鋸割面，鋸片後邊緣上的鋸齒會挖入木材上表面從而引起鋸片爬出切口并朝操作者回彈。

回彈是誤用圓鋸和 / 或不正確操作程序或條件導致結果，采取以下適當預防措施可避免回彈。

a. **雙手緊握圓鋸上的把手，雙臂放置得能抵住回彈力。身體處于圓鋸的任意一側而不對準鋸片**。回彈會導致圓鋸的向後彈起，但如果采取了適當的防備措施，回彈力可以受操作者的控制。

b. **當鋸片卡住，或因任何原因導致的鋸割中斷時，釋放開關扳機并握持圓鋸在材料中不移動，直到鋸片完全停止。不得在鋸片處于運轉或可能發生回彈情況下嘗試將圓鋸從工件中拿走或向後拉動圓鋸**。調查并采取正確的措施以消除鋸片卡住的原因。

c. **當在工件中重新起動圓鋸時，將鋸片對準切口并檢查鋸齒是否插入材料**。如果鋸片卡住了，工具重新起動時，鋸片會爬出工件或從工件上回彈。

d. **支撐大型板料以減少鋸片受擠壓和回彈的危害**。大型板料因自重向下垂，支撐物必須放置在板料下面的兩側，靠近切割綫和板料邊緣都要放置。

e. **不得使用鈍的或破損的鋸片**。没有開鋒的或安裝不當的鋸片會形成窄小的鋸痕，從而導致劇烈摩擦、鋸片卡住和回彈。

f. **鋸割之前，鋸割深度和傾角調節鎖定鈕必須旋緊和緊固**。如果鋸割時鋸片調節器發生移動，可能會引起鋸片卡住和回彈。

g. **當對現存墻體或其他盲區進行 “插入式鋸割” 時要格外小心**。伸出鋸片可能會鋸割到引起回彈的物體。

帶擺動時外護罩的圓鋸、帶擺動式内護罩的圓和帶拖拉式護罩的圓鋸的安全説明。

a. **每次使用前，檢查下護罩閉合是否自如。如果下護罩不能迅速回復，則不得操作圓鋸。不得將下護罩夾住或系綁在開啓位置**。如果圓鋸突然跌落，下護罩可能會彎曲變形，用回縮手柄抬起下護罩，確信在任何鋸割角度和深度下護罩回縮自如，且不會觸及鋸片和任何其它零件。

b. **檢查下護罩彈簧的工作情況，如果護罩及彈簧不能正常工作，必須在使用前對其進行維修**。下護罩可能因零件損害、膠質沉積或廢屑堆積而運動遲緩。

c. **僅當特殊鋸割，例如“插入式鋸割”和“組合式鋸割”，才應用手動方式抬起下護罩。用回縮手柄抬起下護罩，鋸片剛一進入到鋸割材料**就必須釋放下護罩。對所有其他鋸割作業，下護罩應自動回復。

d. **在把圓鋸放置在工作臺或地上之前始終能看到下護罩是遮住鋸片的**。未經防護的、有慣性的鋸片引起圓鋸後退，鋸割到其行程上的物體，要考慮到開關釋放後鋸片停下來的時間。

安全規則 / 定義

閱讀并理解本手册對您非常重要。其信息事關保護**您的安全和避免麻煩**。以下標識可幫助您辨認所要傳達的信息。

⚠ **危險**！表示緊急的危險情形，如不加以避免，將導致死亡或嚴重傷害。

⚠ **警告**！表示潛在的危險情形，如不加以避免，可能導致死亡或嚴重傷害。

⚠ **小心**！表示潛在的危險情形，如不加以避免，可能導致輕度或中度傷害。

⚠ **小心**！（不帶安全警示標志）：表示潛在的危險情形，如不加以避免，可能導致財産損壞。

其他有關圓鋸機的安全規則

⚠ **警告**！使用本工具可産生和 / 或激起灰塵，由此導致嚴重的永久性呼吸系統損傷或其他傷害。始終使用 NIOSH/OSHA 認可的、與所暴露的灰塵類型相適的呼吸保護裝置。避免顆粒直接接觸面部和身體。

⚠ **小心**！使用時佩戴適當的聽力保護裝置。在某些情況下、以及長時間使用時，本産品的噪音可能導致聽力損傷。

- **讓下方防護罩在比切割對象更低的粗糙表面上摩擦會嚴重影響操控性**。電圓鋸會部分抬起，增加鋸片變形的風險。確保工件得到充分的清理。
- **如有必要抬起下方防護罩，應使用回拉杆**。
- **保持鋸片清潔和鋒利**。鋒利的鋸片能最小化失速和回彈的可能性。使用鈍化和 / 或骯臟的鋸片會增加切割負荷，迫使操作者以更大的力推拉，從而誘發變形。

⚠ **小心**！**撕裂傷危害。雙手遠離切割區域**。保持雙手遠離鋸片。决不能在切割時將手放在鋸片行進的路徑上。鋸片旋轉時，不得將手伸到切割對象下方。不得在鋸片運動時試圖移除切割對象。

- **支撐大型切割對象**。必須按本手册圖示（圖 A）爲大型切割對象提供支撐，以最小化鋸片夾住和回彈的風險。僅在兩端支撐（圖 B）會導致鋸片夾住。如切割作業需要，將電圓鋸安放在工件上時，應將鋸子放在較大的一側，將較小的一側切下。
- **安裝鋸片時僅使用正確的鋸片和組裝部件**。不得在軸孔不正確的情況下使用鋸片。决不能使用損壞或不當的鋸片墊圈或螺栓。遵循鋸片組裝流程。

- **調整。切割前務必確保深度和斜切角調整杆的緊固度。**
- **適當支撐和固定切割對象。**確保切割對象被夾緊（圖 C），并在堅固、穩定和水平的工作面上獲得牢固的支撐和平衡。支撐切割對象，讓鋸底板較寬的一側位于切割對象被切割後不會掉落的一側。決不能用手持握切割下的工件（圖 D）。鋸片夾住可導致回彈。 應始終雙手持握。
- **保持警惕，注意控制身體始終位于鋸片的一側。**始終用雙手牢牢握持并控制鋸身。鋸片運轉時不要改變握持方式或身體姿勢。采取預防措施，避免切下的物件和其他作業中掉落的物品導致受傷。

⚠ **危險**！ 如鋸片卡住或鋸子停轉，立即鬆開扳機。

功能部件（圖 E）

1. On / Off 開關
2. 主握柄
3. 次握柄
4. 底板
5. 鋸片
6. 鋸片防護罩
7. 鋸片防護罩回拉杆
8. 鋸片活動扳手
9. 斜角調整旋鈕
10. 外墊圈
11. 鋸片固定螺絲
   鋸片六角扳手(15)（見圖 I）
   導尺(18) （見圖 M）
   内法蘭(20) （見圖 J）

組裝 / 調整設置

⚠ **警告**！ 進行任何以下操作前始終拔下電源插頭。

調整切割深度（圖 F 和 G）

切割深度可根據工件厚度設置。

- 鬆開卡杆（12）解鎖鋸底板。
- 移動鋸底板（4）至所需位置。可從刻度（13）上讀出相應的切割深度。
- 拉緊卡杆鎖定鋸底板。
- 切割深度以一個鋸齒突出到工件下方（如圖 G 所示）爲宜。

調整斜切角（圖 H）

本工具可在 0 至 45 度的範圍内設置斜切角

- 鬆開鎖定旋鈕（9）解鎖鋸底板。
- 移動鋸底板（4）至所需位置。可從刻度（14）上讀出相應的斜切角度。
- 拉緊鎖定旋鈕鎖定鋸底板。

安裝鋸片（圖 I 和 J）

- 爲避免軸心旋轉，如圖 I 所示將活動扳手（8）突起部塞入外墊圈（10）洞内。
- 逆時針轉動六角扳手（15）卸下鋸片固定螺絲（11）。
- 卸下外墊圈。
- 檢查并調整内法蘭（20），確保標有與鋸片（5）内孔直徑相匹配的數字面朝外，裝于輸出軸（16）上。
- 將鋸片（5）放在内法蘭（20）上，確保鋸片上的箭頭與工具上的箭頭朝向一致。
- 將外墊圈（10）安裝在轉軸上，斜邊對遠離鋸片的一側。
- 將鋸片固定螺絲（11）擰入轉軸螺絲孔。
- 將活動扳手突起部塞入外墊圈洞内以避免轉軸旋轉。
- 握住活動扳手、順時針方向轉動六角扳手，以擰緊鋸片固定螺絲。

⚠ **警告**！ 内法蘭（20）正反面標有數字“19“和“20”，用于配内孔直徑分别爲19mm和20mm的鋸片（5）。

卸除鋸片

- 爲避免軸心旋轉，將活動扳手（8）突起部塞入外墊圈（10）洞内。
- 使用六角扳手（15）逆時針旋轉卸下片固定螺絲（11）。
- 卸下外墊圈（10）。
- 卸除鋸片（5）。

⚠ **警告**！ 爲減少嚴重人身傷害的風險，請在使用工具前閱讀、理解并遵守所有重要安全警告和指示說明。

一般切割

謹防回彈

拔下電源插頭，執行所有組裝、調試和設置說明步驟。確保下方防護罩能正常工作。

針對要切割的材質選擇合適的鋸片。

- 對切割工件進行測量和標記。
- 充分支撐和固定工件（見安全規則和指示說明）。
- 視需要使用合適的安全裝備（見安全規則）。
- 維護工作場所安全并保持整潔（見安全規則）。
- 插上電源并閉合防護罩後，確保開關能正常啓停電圓鋸。

⚠ **警告**！ 充分支撐工件并牢牢持握電圓鋸非常重要，以避免可導致人身傷害的失控。圖 C 爲推薦持握姿勢示意。

操作

開關

- 如需操作工具，深按觸發開關（1）。祇要保持深按狀態，該工具就將持續運轉。
- 如需關閉工具，請釋放觸發開關（1）。該工具不可鎖定爲開啓狀態，决不能以任何其他方式將開關鎖定爲開啓狀態。

切割

⚠ **警告**！爲减少嚴重人身傷害的風險，始終用雙手持握。

- 開始切割前讓鋸片空轉數秒。
- 切割時僅對工具輕輕施壓。
- 工作時用鋸底板壓住工件。

最佳使用的技巧

- 工件頂部在切割綫附近產生一些碎屑是無法避免的，請在碎屑量可以接受的一側進行切割。
- 如需要盡量减少碎屑——例如切割層壓材料時，請在工件上方放置一塊膠合板并夾緊。

袋形切割（圖 K）

袋形切割用于在工件上切出洞形切口，而不切到任何一側。

- 測量并標記工件。
- 使鋸身前傾，讓鋸底板前部靠在待切割物體上。調整到合適的位置，從所畫出的長方形後部開始切割，如圖 K 所示。
- 使用回拉杆將鋸片防護罩收起至靠上位置，使鋸片剛好能够到切割物體，啓動馬達，讓鋸片緩緩切入。

⚠ **警告**！當鋸片開始切割後，立即鬆開回拉杆。

- 决不能將鋸片防護罩固定在抬起位置。
- 將鋸底板平放在待切割物體上時，以向前的方向完成切割。
- 等鋸片完全停轉再將鋸子從切割物體中取出。
- 在每一次新的切割作業前重復上述步驟。

扳手存儲（圖 L）

活動扳手（8）可如圖 L 所示存放在鋸底板内。

安裝

- 鬆開鎖定旋鈕（17）。
- 從開口處（19）插入導尺。
- 將導尺插到所需位置。
- 拉緊鎖定旋鈕。

卸除

- 鬆開鎖定旋鈕。
- 將導尺拉出。注：如果您没有合適的導軌，可將直邊卡尺靠在鋸底板邊緣以提高切割精度，减少運轉不暢和回彈的風險。

附件

任何電動工具的性能都取决于所使用的附件。史丹利和 Piranha 附件依據高質量標準進行規劃，并設計用于增强電動工具的性能。購買這些附件會令您的工具如虎添翼。

⚠ **警告**！使用任何不建議與本工具配合使用的附件會導致危險。僅使用軸孔直徑爲19毫米或 20 毫米的 185 毫米鋸片。
另外：不得使用任何砂輪。

維護

您的工具設計精良，可以長期使用，僅需極少維護。要連續獲得令人滿意的工作效果，需要您進行正確的保養和定期的清潔。

⚠ **警告**！在進行任何維護前關閉電源并拔下插頭。

- 定期使用軟刷或幹布清潔工具内的通風槽。
- 定期使用濕布清潔電動機外殼。請勿使用任何研磨性或基于溶劑的清潔劑。

⚠ **重要**！爲了確保產品安全及可靠，所有的維修、保養和調節，除了本手册中列出的以外，均應該由授權的檢修中心或合格的維修服務人員執行，并始終使用相同的備件。

潤滑

史丹利工具已在工廠經過充分潤滑，可立即使用。

保護環境

分類回收。本產品不得與普通家庭垃圾一起處理。

如果您發現您的史丹利產品需要進行替換，或您已經不再需要使用這些產品，請不要將它們與家庭廢物一起處理。請單獨對本產品進行分類回收。

舊產品及包裝的分類回收可使回收材料得以再度循環和利用。再循環材料的重新利用有助于防止環境污染和减少原料需求。

當您購買新產品時，可從家庭、城市垃圾站或通過零售商獲得電氣產品分類收集的當地法規。

進口商: 永安實業股份有限公司
電話: 02–29994633
地址: 新北市三重區中山路286號1F